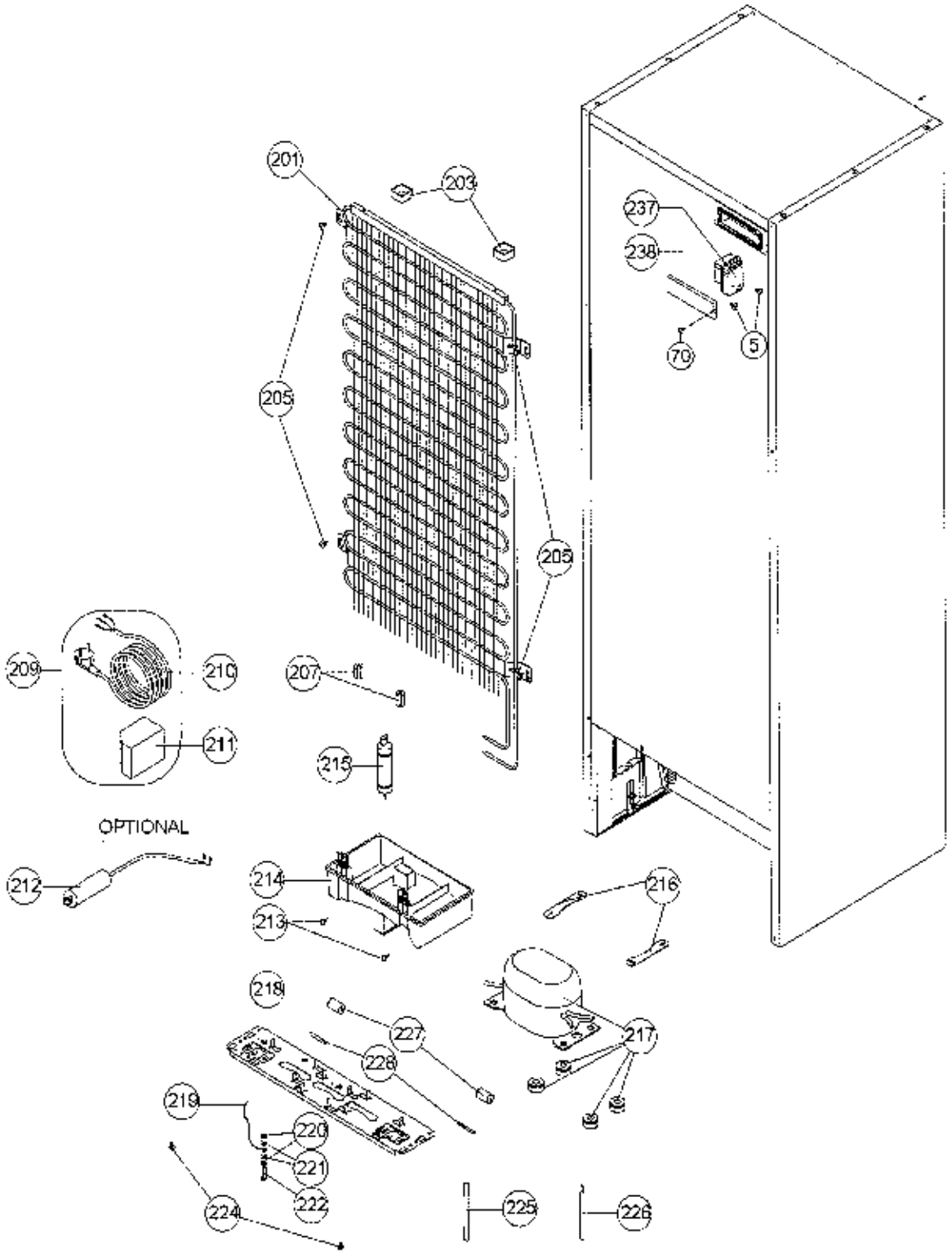VESTEL WHITE GOODS	VESTEL REFRIGERATOR	CUSTOMER SUPPORT
	UNIT PARTS